Worm Gear Units

TORQUE ARM

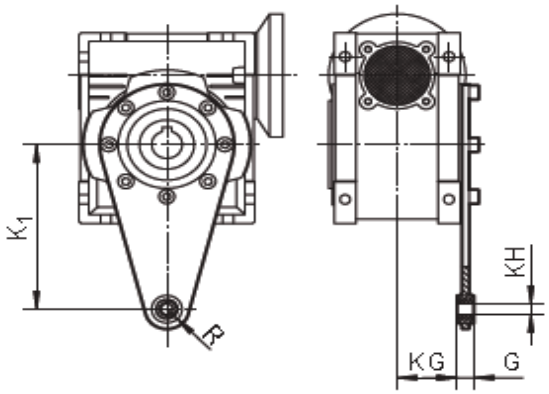

SIZE	K1	G	KG	KH	R
25	70	14	17.5	8	15
30	85	14	24	8	15
40	100	14	31.5	10	18
50	100	14	38.5	10	18
63	150	14	49	10	18
75	200	25	47.5	20	30
90	200	25	57.5	20	30
110	250	30	62	25	35
130	250	30	69	25	35
150	250	30	84	25	35

COVER

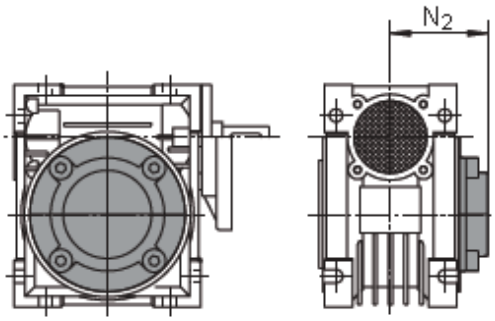

SIZE	N2	SIZE	N2
25	N/A	**75**	73.5
30	42	**90**	85.5
40	50	**110**	94
50	57.5	**130**	102117
63	68.5	**150**	130

MOUNTING POSITIONS

B3	B6	V5	V6
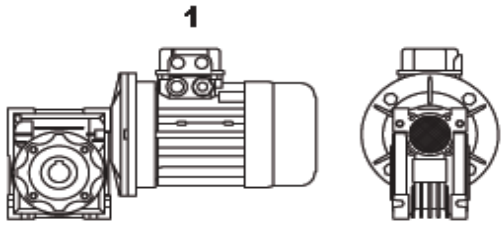	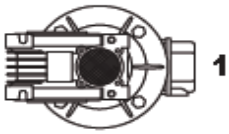	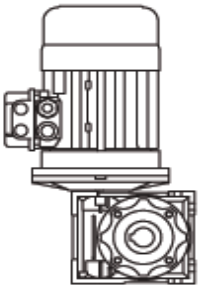	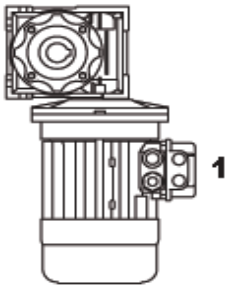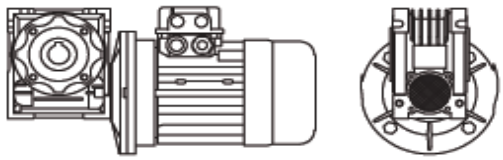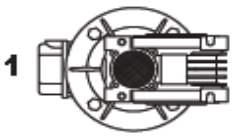
B8	**B7**