Worm Gear Units

DIMENSIONS FCNDK75

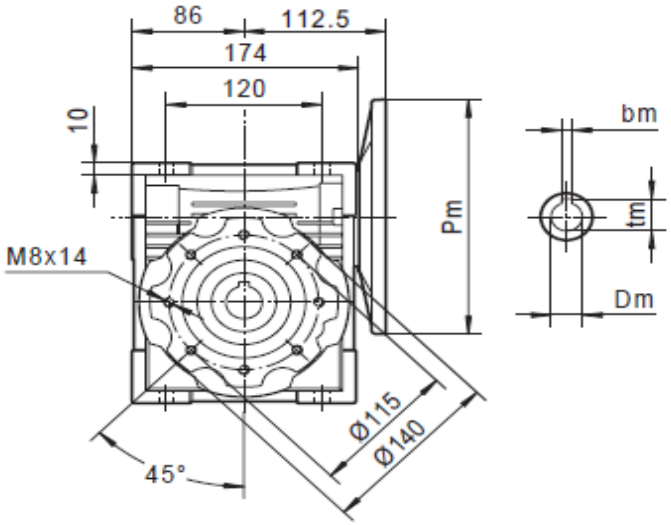

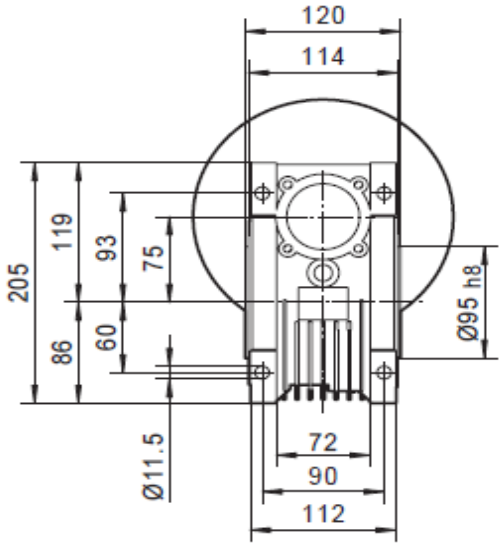

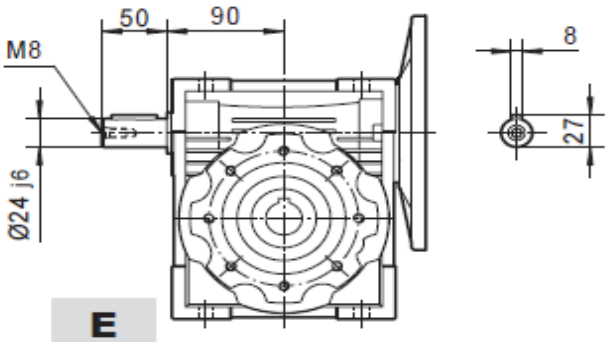

E

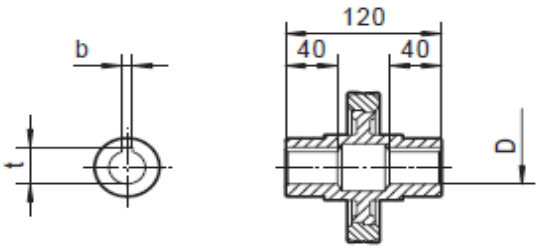

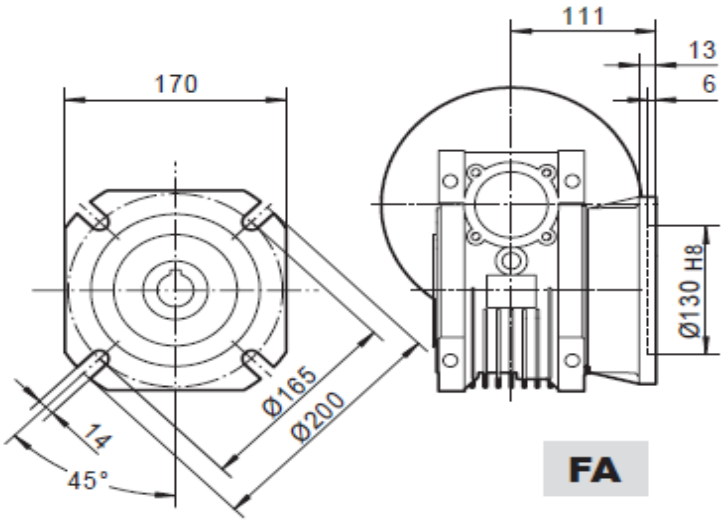

FA

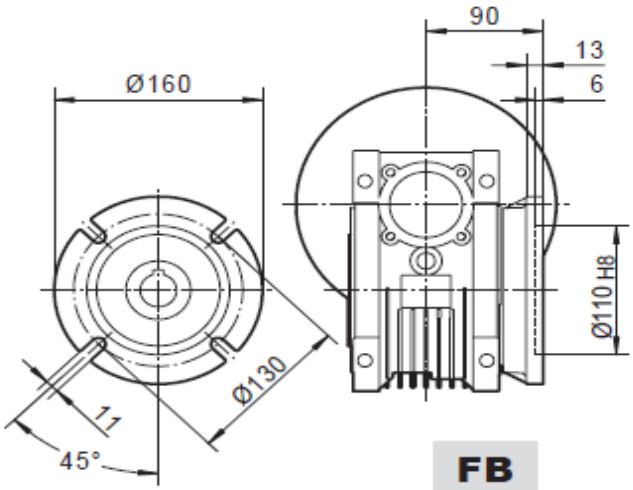

FB

PAM IEC	Pm	Dm	bm	tm	D H8	b	t
100/112B5	250	28	8	31.3	28	8	31.3
90B5	200	24	8	27.3	30*	8	33.3
80B5	200	19	6	21.8	35*	10	38.3
71B5	160	14**	5	16.3	* Only on request ** Requires reducing sleeve		
100/112B14	160	28	8	31.3			
90B14	140	24	8	27.3			
80B14	120	19	6	21.8			

Weight without motor = 9 Kg