Worm Gear Units

FCNDK/FCNDK COMBINATION UNITS

FCNDK30/50

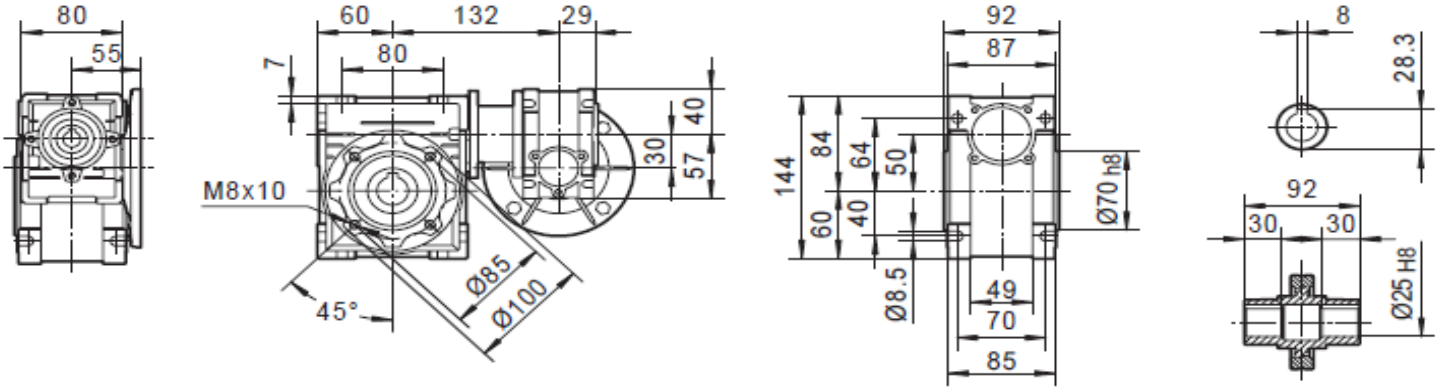

FCNDK30/63

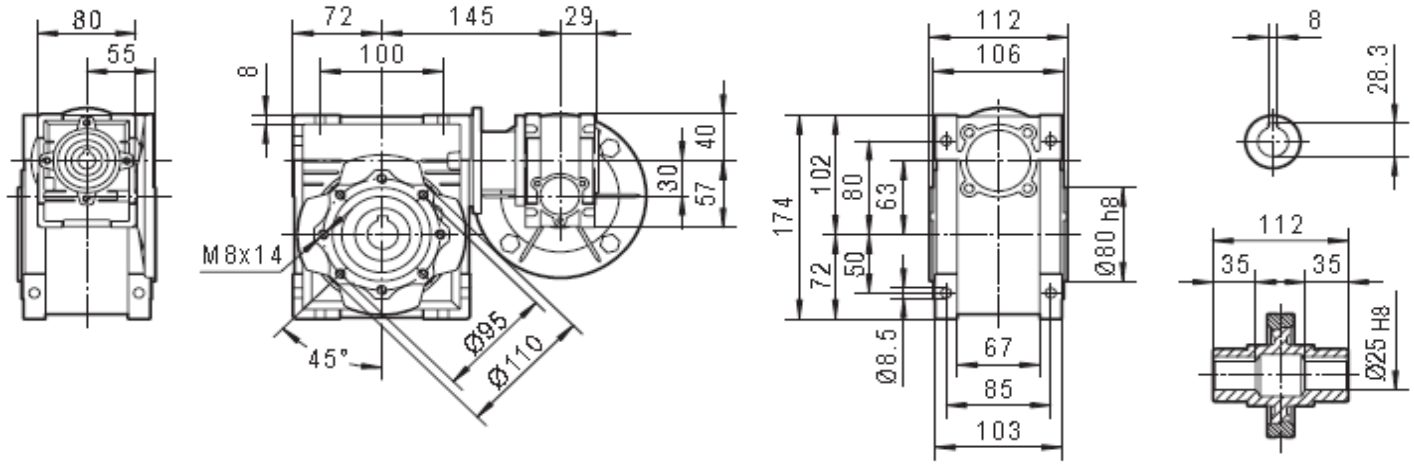
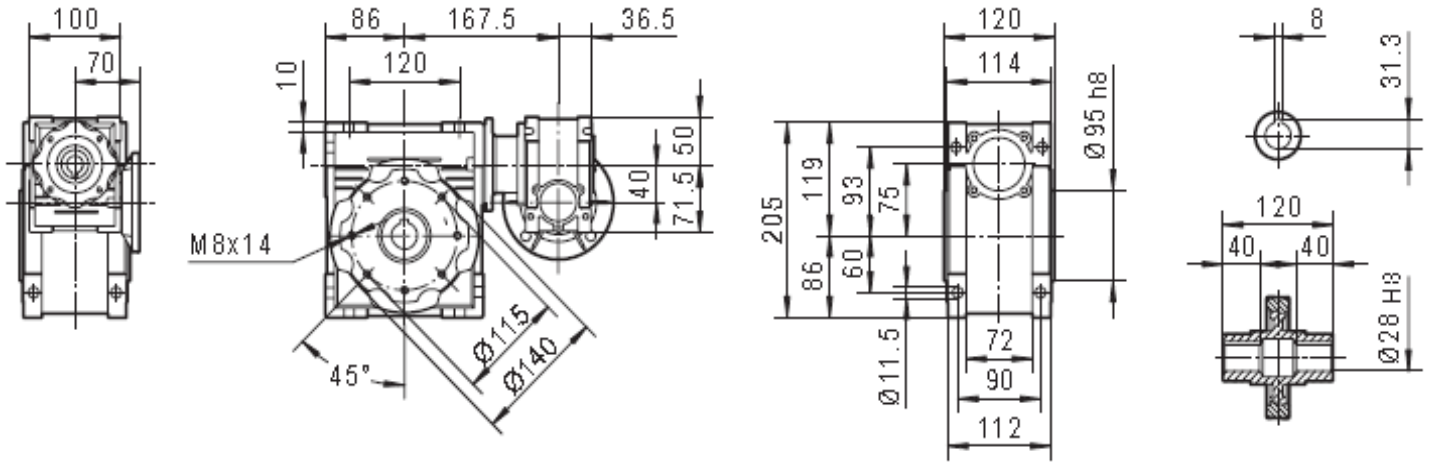
FCNDK40/75