Worm Gear Units

LUBRICATION (Litres)

FCNDK	25	30	40	50	63	75	90	110	130	150
B3	0.02	0.04	0.08	0.15	0.30	0.55	1.00	3.00	4.50	5.50
B6-B7								2.20	3.50	5.00
B8								2.50	3.30	4.50
V5								3.00	4.50	5.50
V6								2.50	4.50	5.50

Reduction unit's size 25-90 are filled with synthetic lubricant which is suitable for life and can be mounted in any position shown. As an additional feature sizes 63.75 and 90 have filler, level and drain plugs. Sizes 110, 130 and 150 are filled with mineral oil. It is essential that the blanking plug, supplied during transportation, is replaced with the breather plug prior to operation.

EXPLODED VIEW OF PARTS

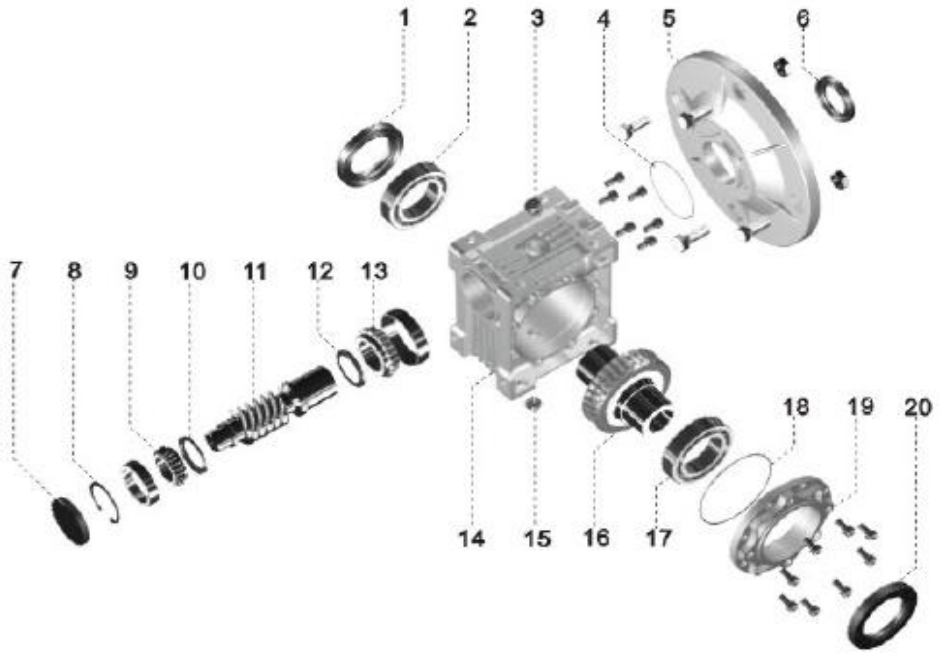

Item	Description
1	Oil seal
2	Bearing
3	Breather plug
4	O' ring
5	Input flange
6	Oil seal
7	End cap
8	Circlip
9	Bearing
10	Oil disc
11	Worm shaft
12	Oil disc
13	Bearing
14	Case
15	Plug
16	Worm wheel
17	Bearing
18	O' ring
19	Output bearing cover
20	Oil seal