Worm Gear Units

DIMENSIONS FCNDK150

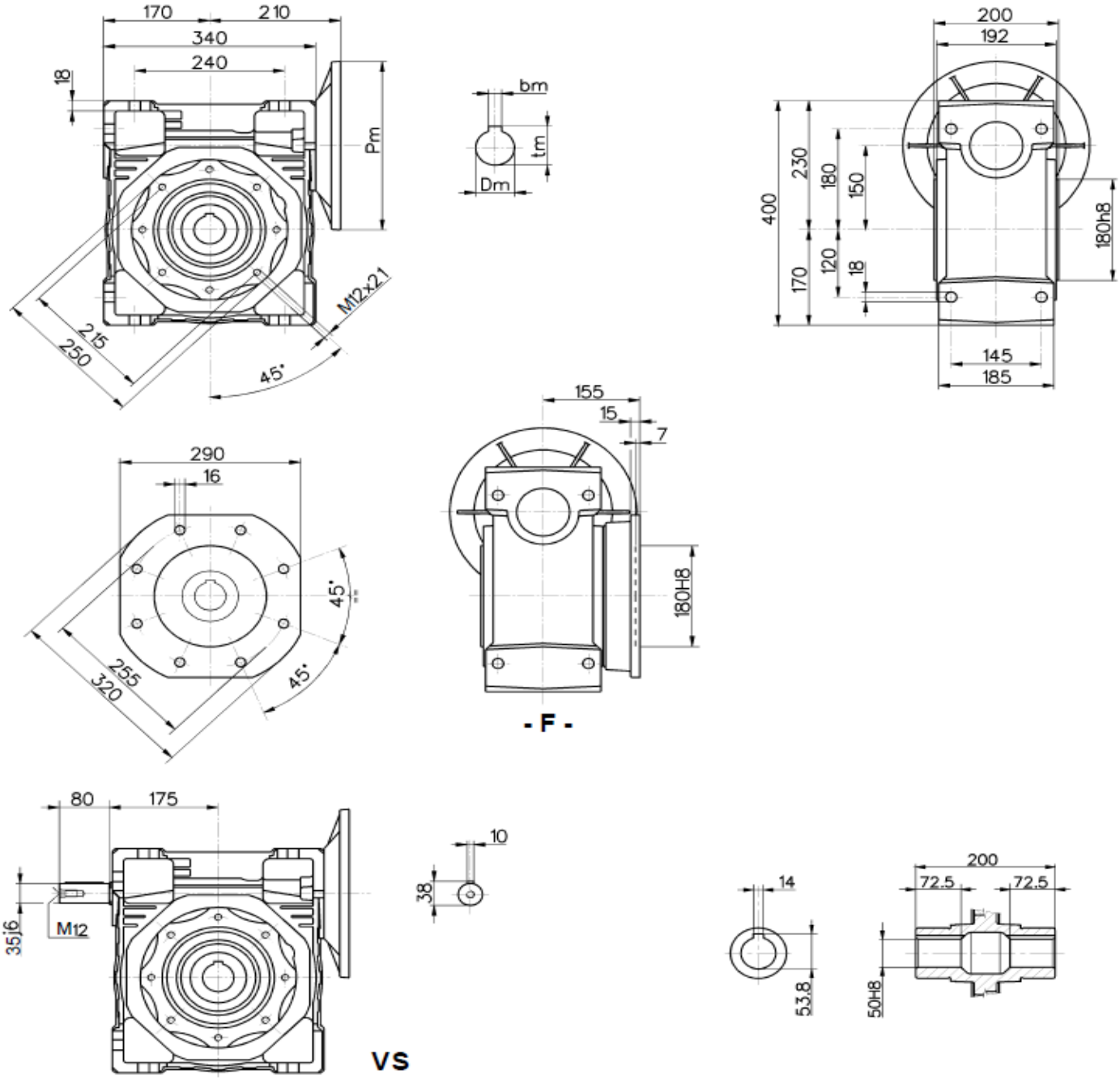

PAM IEC	Pm	Dm	bm	tm
160B5	350	42	12	45.3
132B5	300	38	10	41.3
100/112B5	250	28	8	31.3

Weight without motor = 84Kg