Worm Gear Units

DIMENSIONS FCNK SOLID INPUT VERSIONS

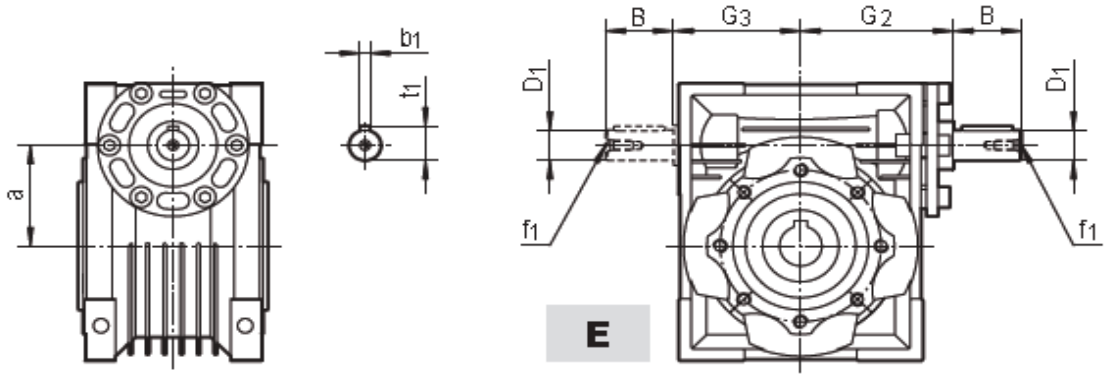

FCNK	30	40	50	63	75	90	110	130
B	20	23	30	40	50	50	60	80
D1 j6	9	11	14	19	24	24	28	30
G2	51	60	74	90	105	125	142	162
G3	45	53	64	75	90	108	135	155
a	30	40	50	63	75	90	110	130
b1	3	4	5	6	8	8	8	8
f1	24	8	M6	M6	M8	M8	M10	M10
t1	10.2	12.5	21.5	21.5	27	27	31	33

For missing dimensions, please refer to the induvidual FCNDK pages

DIMENSIONS SINGLE/DOUBLE OUTPUT SHAFT

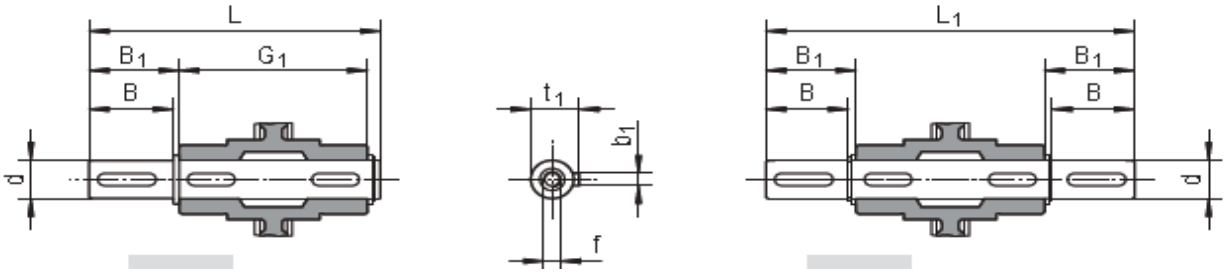

SIZE	d h6	B	B1	G1	L	L1	f	b1	t1
25	11	23	25.5	50	81	101	N/A	4	12.5
30	14	30	32.5	63	102	128	M6	5	16
40	18	40	43	78	128	164	M6	6	20.5
50	25	50	53.5	92	153	199	M10	8	28
63	25	50	53.5	112	173	219	M10	8	38
75	28	60	63.5	120	192	247	M10	8	31
90	35	80	54.5	140	234	309	M12	10	38
110	42	80	84.5	155	249	324	M16	12	45
130	45	80	85	170	265	340	M16	14	48.5
150	50	82	87	200	297	374	M16	14	53.5