Worm Gear Units

FCNDK/FCNDK COMBINATION UNITS

FCNDK25/30

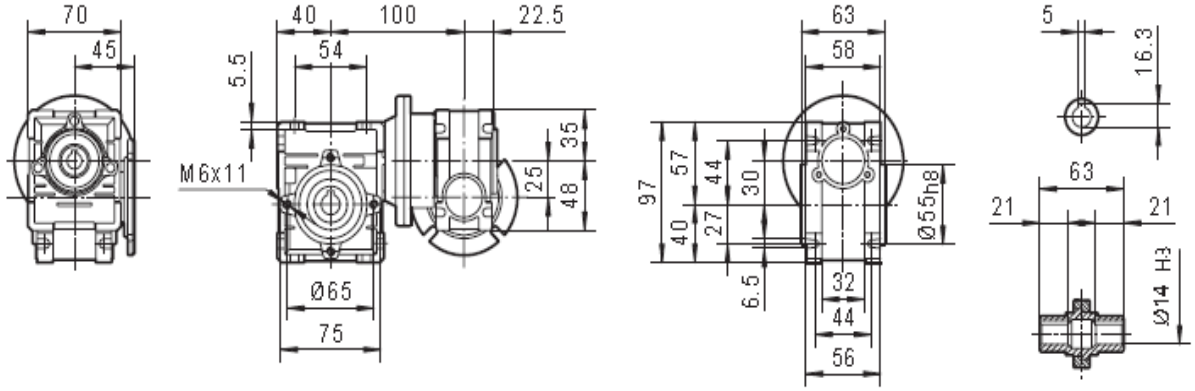

FCNDK25/40

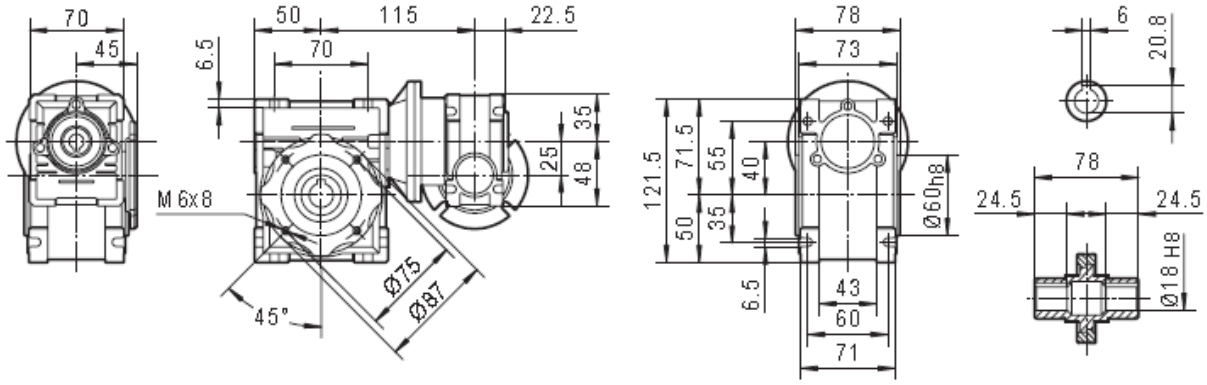
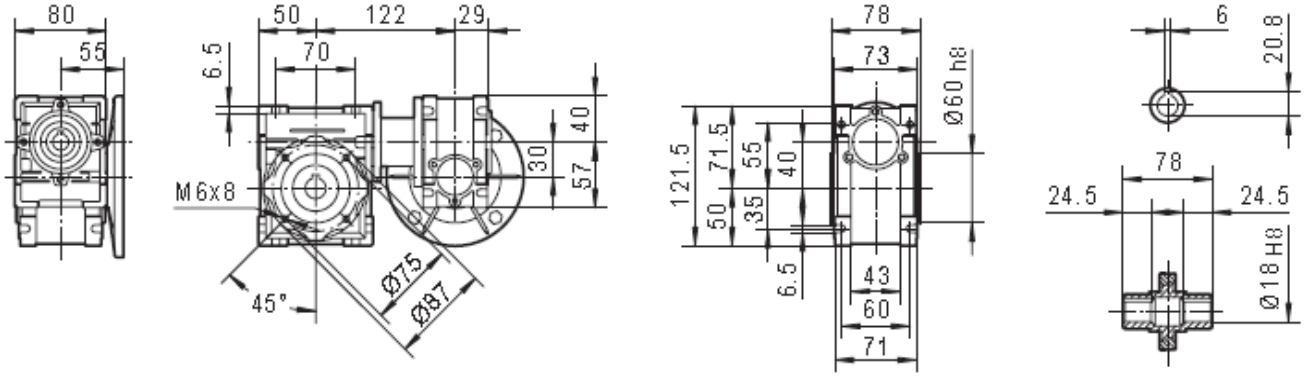
FCNDK30/40