Worm Gear Units

FCNDK/FCNDK COMBINATION UNITS

FCNDK40/90

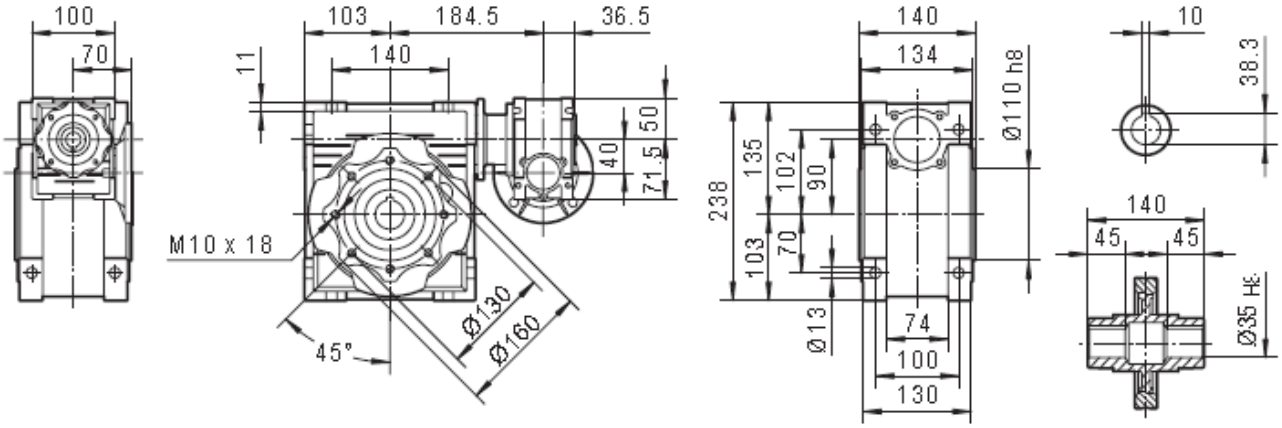

FCNDK50/110

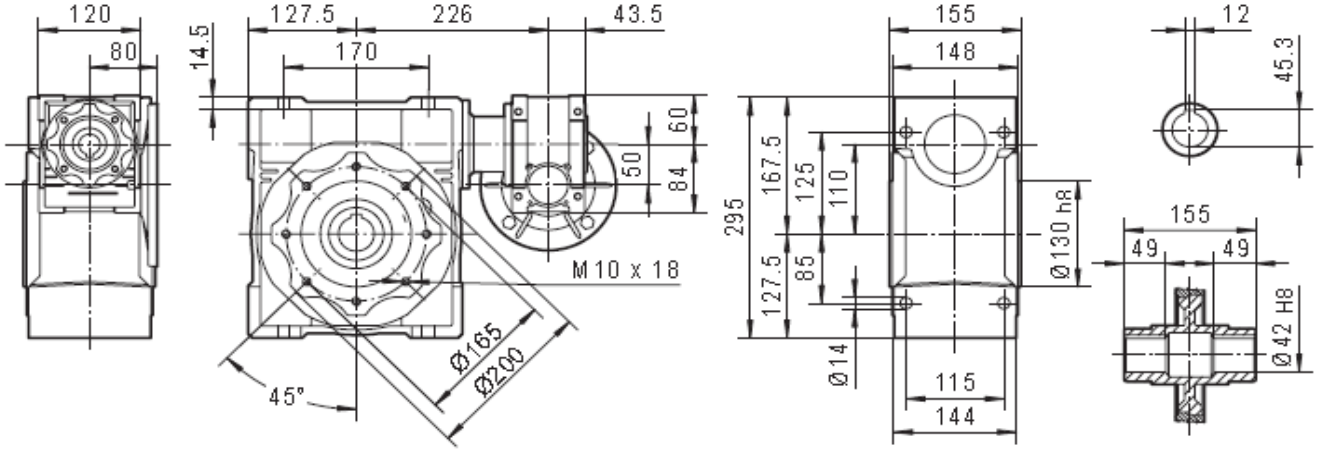
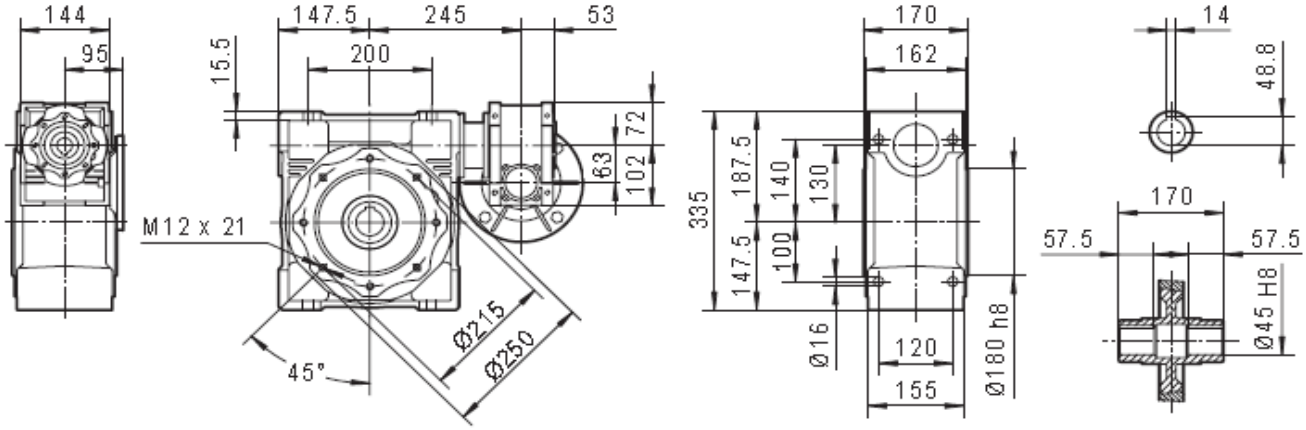
FCNDK63/130